SUPERVIZOR
D.R.D.P. TIMIŞOARA
BUN DE EXECUȚIE
DATA: 01.04.2022

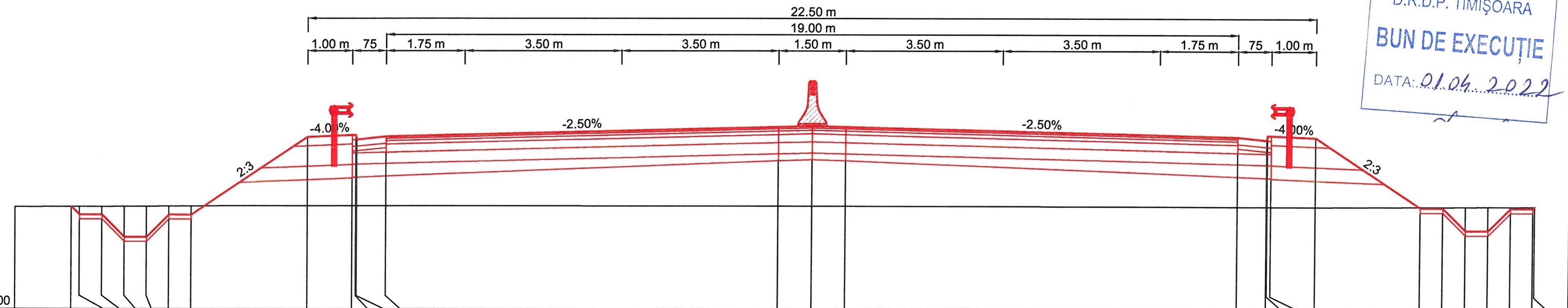

COTE PROIECT	93.28	93.10	93.10	92.60	92.60	93.10	93.10	94.84	94.88	94.88	94.78	94.84	95.06	95.08	95.06	94.84	94.78	94.88	94.88	94.84	93.28	93.28	92.78	92.78	93.28	93.28	93.32
COTE TEREN	93.28	93.28	93.28	93.28	93.28	93.29	93.29	93.30	93.30	93.30	93.30	93.30	93.30	93.30	93.30	93.29	93.29	93.29	93.29	93.29	93.31	93.31	93.31	93.31	93.31	93.32	93.32
DISTANTE	-16.54	-16.36	-15.86	-15.36	-14.86	-14.36	-13.86	-11.25	-10.25	-10.17	-10.15	-9.50	-0.75	0.00	0.75	9.50	10.15	10.17	10.25	11.25	13.59	14.09	14.59	15.09	15.59	16.09	16.12

KM = 3875.00

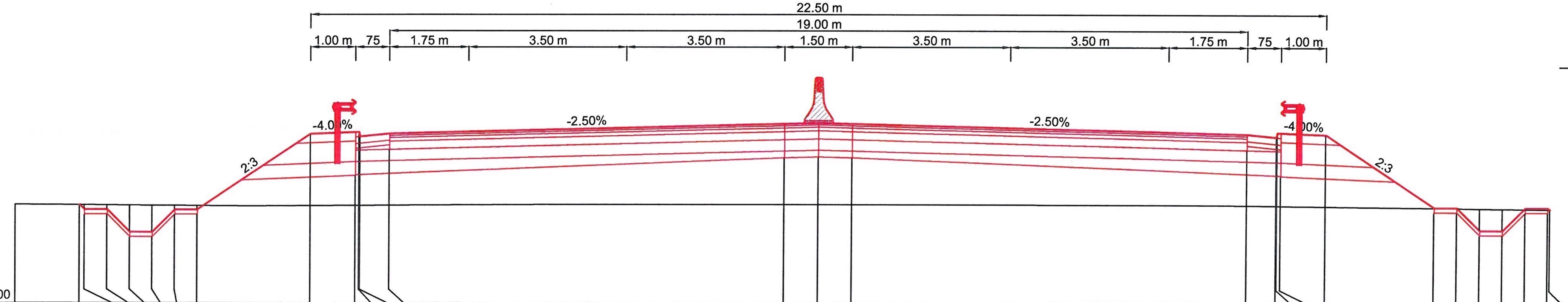

COTE PROIECT	93.17	93.06	93.06	92.56	92.56	93.06	93.06	94.73	94.77	94.77	94.67	94.74	94.96	94.98	94.96	94.74	94.67	94.77	94.77	94.73	93.13	93.13	92.63	92.63	93.13	93.13	93.10
COTE TEREN	93.17	93.17	93.16	93.16	93.16	93.15	93.15	93.15	93.16	93.16	93.16	93.16	93.18	93.18	93.18	93.17	93.16	93.16	93.16	93.15	93.13	93.12	93.12	93.11	93.11	93.11	93.10
DISTANTE	-16.37	-16.26	-15.76	-15.26	-14.76	-14.26	-13.76	-11.25	-10.25	-10.17	-10.15	-9.50	-0.75	0.00	0.75	9.50	10.15	10.17	10.25	11.25	13.65	14.15	14.65	15.15	15.65	16.15	16.19

KM = 3850.00

POPESCU A. CĂT... IN
ING. VERIFICATOR P...

SOCIETATEA COMERCIALA TOTAL ROAD S.R.L. BUCUREȘTI - ROMANIA

BENEFICIAR:
COMPANIA NATIONALA DE ADMINISTRAREA INFRASTRUCTURII RUTIERE S.A. (C.N.A.I.R. S.A.)

ANTREPRENOR:
TODINI CONSTRUZIONI GENERALI S.p.A.

TITLU PROIECT
PROIECTARE SI EXECUȚIE „DRUM DE LEGĂTURĂ AUTOSTRADA A1 ARAD - TIMIȘOARA - DN 69"

FAZA PROIECT
PROIECT TEHNIC DE EXECUTIE (P.T.E.)

CONTRACT NR.
92/7703/01.02.2021

PROIECT NR.
08/2021

SPECIFICATIE	NUME	SEMNATURA
DESENAT	Teh. Sorin VASILACHE	
PROIECTAT	Ing. Mihai COROIAN	
SEF PROIECT	Ing. Catalin GRUIANU	
VERIFICAT	Ing. Adrian NISTOR	

DATA Martie 2022
MĂRIMEA A3
SCARĂ 1:100

TITLU PLANSA:
LUCRARI DE INFRASTRUCTURA RUTIERA
PROFILURI TRANSVERSALE CURENTE
DRUM DE LEGATURA DN 69 - A1

NUMAR PLANSA: PTC - 082
PICHET -

Revizie		
NR.	DATA	DESCRIERE
0	08.2021	Emitere P.T.E.
1	09.2021	Conf. nr.290/DLA1-224
2	02.2022	Conf. ASR 92/93833

PAGE 1 / 1